SOLAX



LD16 / LD14

LD16-E / LD16-ME / LD14-ME

Installation Manual

Version 3.0

www.solaxpower.com

eManual in the QR code or at www.solaxpower.com

Packing List / Packliste / Liste du matériel livré / Lista de piezas / Lista da embalagem / Paklijst / Contenuto della confezione / Zawartość opakowania / Seznam balení / Packlista / Listă de ambalare / **Опаковъчен лист** / Pakkeliste / **Λίστα συσκευασίας** / Pakkeleht / Pakkausluettelo / Popis pakiranja / Csomaglista / Pakuotės turinys / Iepakojuma saraksts / Zoznam položiek balenia / Seznam pakiranja / Kutu Listesi / Lista de Embalagem

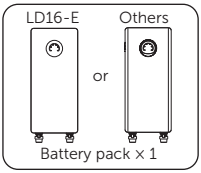

Battery pack × 1

A

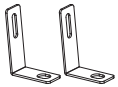
L-shaped bracket × 2

B


M5 screw × 6

C


Expansion tube × 4

D


Self-tapping screw × 4

E

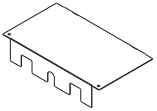
Top cover × 1

F


Power cable (+)
(1500 mm) × 1

G


Power cable (-)
(1500 mm) × 1

H

Communication cable
(1500 mm) × 1

I


Ring terminal (for
grounding cable) × 2

J


Ring terminal (for
power cable) × 2

K

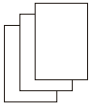
Document

NOTICE!

- Please be subjected to the device you received.

Mounting Location / Montageort / Emplacement de montage / Ubicación de montaje / Localização de montagem / Bevestigingslocatie / Posizione di montaggio / Lokalizacja miejsca montażu / Montážní místo / Monterings plats / Locație de montare / **Място за монтаж** / Monteringssted / **Τοποθεσία στερέωσης** / Paigalduskoht / Asennuspaikka / Mjesto postavljanja / Rögzítési hely / Montavimo vieta / Montāžas vieta / Miesto inštalácie / Mesto namestitve / Montaj Konumu / Local de montagem

NOTICE!

- For outdoor installation, precautions against direct sunlight, rain exposure and snow accumulation are recommended.
- Exposure to direct sunlight raises the temperature inside the device. This temperature rise poses no safety risks, but may impact the device performance.

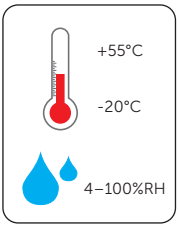



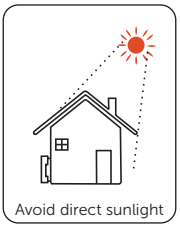



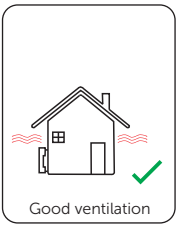

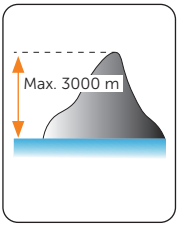









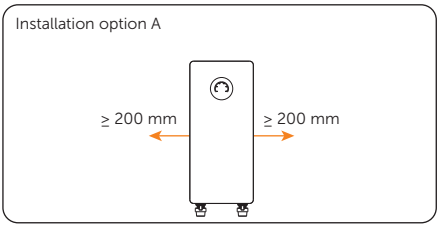

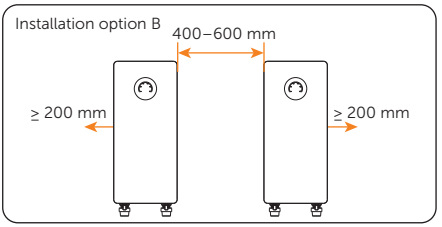

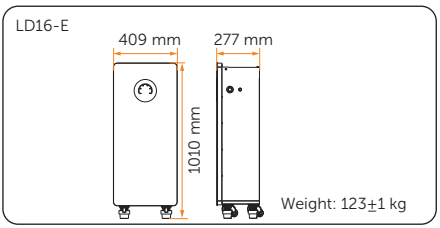

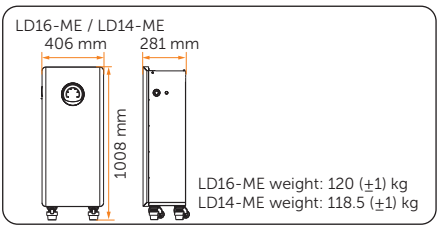

System Diagram / Systemübersicht / Schéma du système / Diagrama de sistemas / Diagrama do Sistema / Systeemdiagram / Schema di sistema / Schemat układu / Schéma systému / Systemdiagram / Diagrama sistemului / **Схема на системата** / Systemdiagram / **Διάγραμμα συστήματος** / Süsteemi diagramm / Järjestelmäkaavio / Dijagram sustava / Rendszerdiagram / Sistemos schema / Sistēmas shēma / Systémový diagram / Sistemski diagram / Sistem Şeması / Diagrama do sistema

Here takes LD16-E as an example, other models are similar.

Wiring for single battery pack

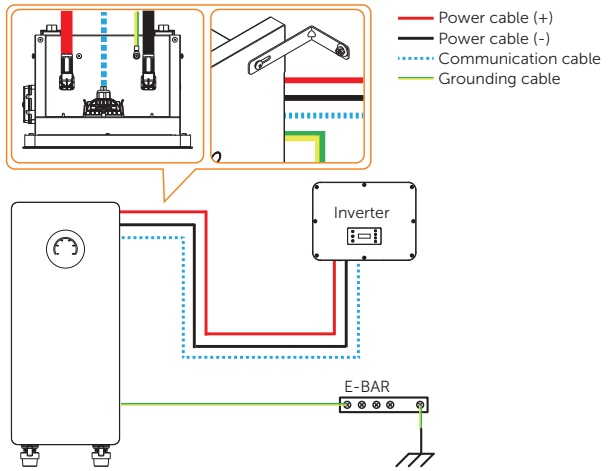

Wiring two or more battery packs

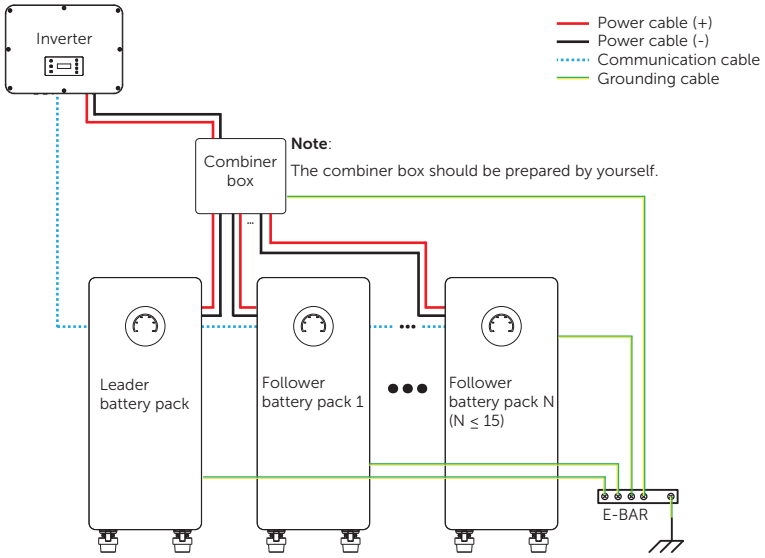

Communication cable connection:

- Between the leader battery pack and inverter: **BMS** to **BMS**.
- Between battery packs: **COM A** to **COM B**.

Mechanical Installation / Mechanische Installation / Installation mécanique / Instalación mecánica / Instalação mecânica / Mechanische installatie / Installazione meccanica / Instalacja mechaniczna / Mechanická instalace / Mekanisk installation /Instalare mecanică / **Механичен монтаж** / Mekanisk installation / **Μηχανική εγκατάσταση** / Mehaaniline paigaldus / Mekaaninen asennus / Mehanička ugradnja / Mechanikai telepítés / Mechaninis montavimas / Mehāniskā uzstādīšana / Mechanická inštalácia /Mehanska namestitev / Mekanik Kurulum / Instalação Mecânica

WARNING!

- The battery must be powered off during the entire installation process.

NOTICE!

- To avoid tipping over, do not move the battery from either the front or back side.
- Installation steps for each battery pack are the same. The following steps take a battery pack for instance.
- Here takes LD16-E as an example, other models are similar.

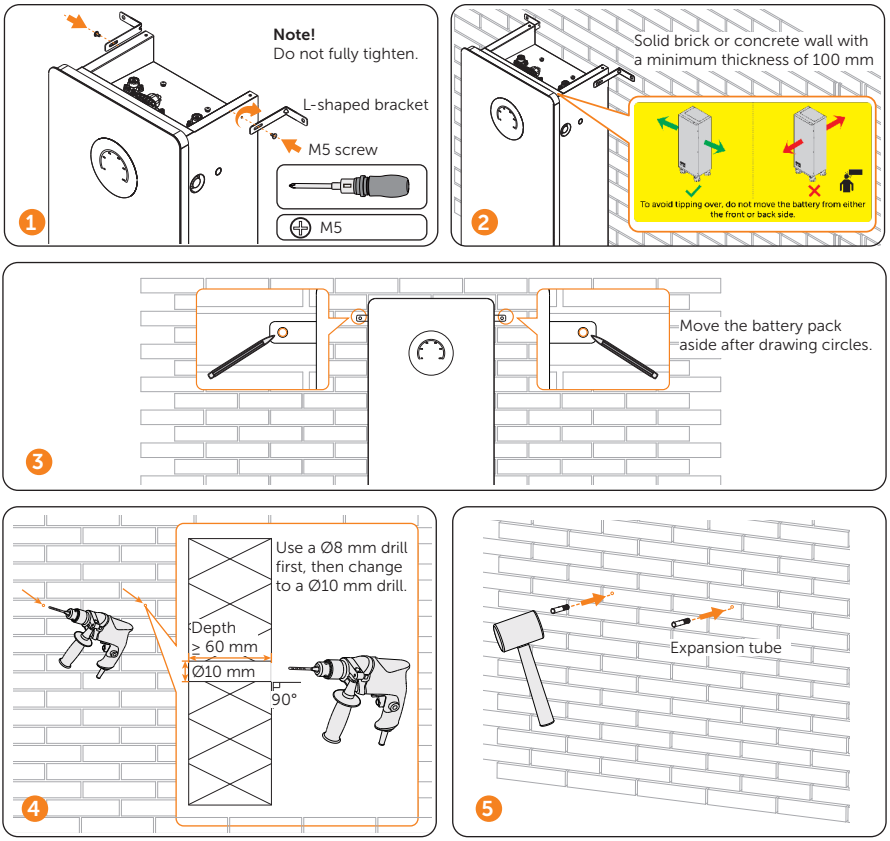

Next steps: perform electrical connection.

Electrical Connection / Elektrischer Anschluss / Raccordement électrique / Conexión eléctrica / Ligação Elétrica / Elektrische aansluiting / Collegamento elettrico / Połączenia elektryczne / Elektrické připojení / Elektrisk anslutning / Conexiune electrică / **Електрическа връзка** / Tilslutning til strøm / **Ηλεκτρική σύνδεση** / Elektriühendus / Sähköliitäntä / Električni priključak / Elemtromos csatlakozás / Elektros jungtis / Elektriskais savienojums / Elektrické zapojenie / Električna povezava / Elektrik Bağlantısı / Conexão elétrica

Grounding Connection

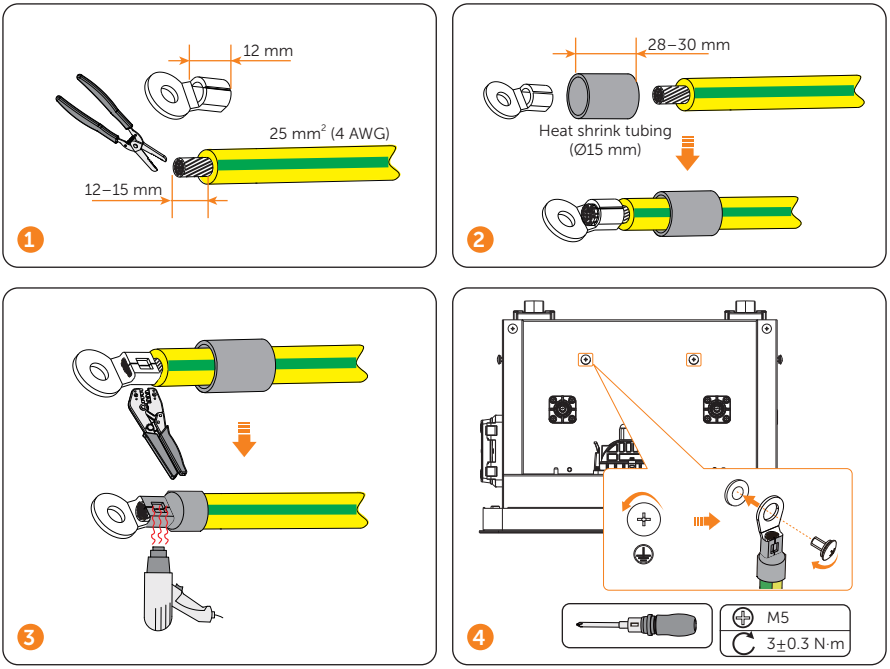

Communication Connection

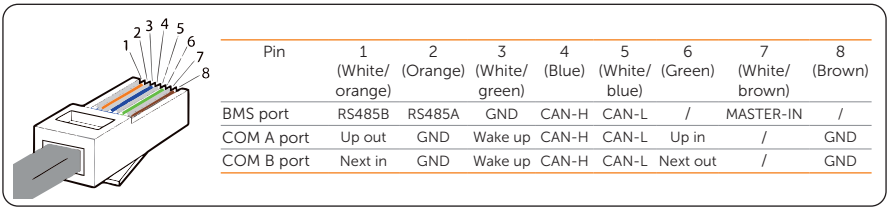

Pin	1 (White/ orange)	2 (Orange)	3 (White/ green)	4 (Blue)	5 (White/ blue)	6 (Green)	7 (White/ brown)	8 (Brown)
BMS port	RS485B	RS485A	GND	CAN-H	CAN-L	/	MASTER-IN	/
COM A port	Up out	GND	Wake up	CAN-H	CAN-L	Up in	/	GND
COM B port	Next in	GND	Wake up	CAN-H	CAN-L	Next out	/	GND

Note: When you need to make communication cable(s), please strictly follow the Pin definitions.

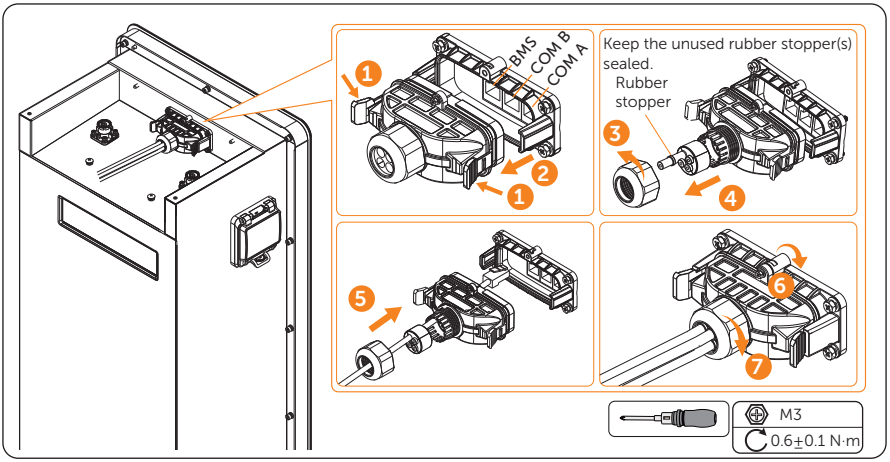

Power Cable Connection

For the power cable from the packing list, one end of it is already crimped for connecting the battery pack, you have to crimp another end of it for connecting another device.

WARNING!

- Cable connection order: Negative power cable → positive power cable.

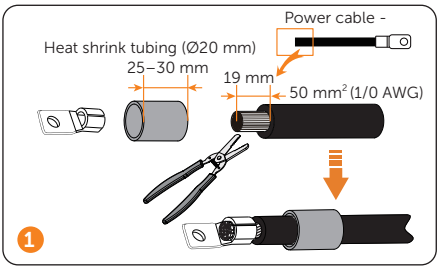

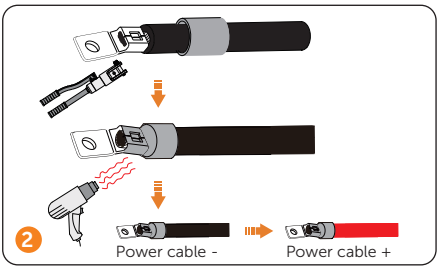

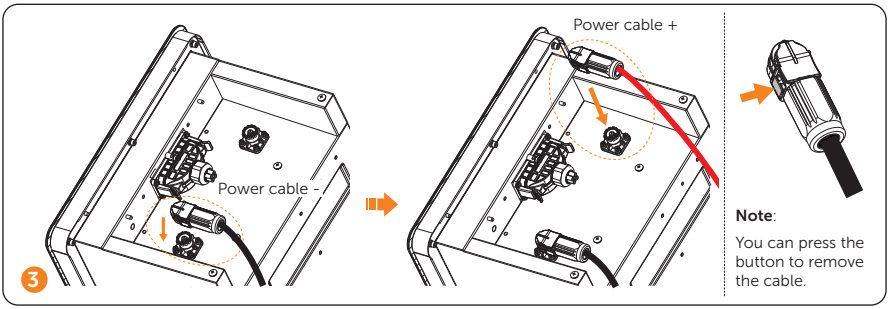

For details about the connection on the inverter side or combiner box side, please refer to the user manual of inverter or combiner box.

Fixing Battery Pack / Befestigung des Batteriepacks / Réparation du pack de batteries / Reparación de la batería / Reparação da bateria / De accu repareren / Riparazione del pacco batteria / Naprawa zestawu akumulatorów / Oprava baterie / Montering av batteripaket / Fixarea pachetului de baterii / **Фиксиране на батерийния пакет** / Fastgørelse af batteripakken / **Επισκευή μπαταρίας** / Aku kinnitamine / Akuston kiinnittäminen / Popravljanje baterijskog kompleta / Az akkumulátorcsomag javítása / Akumuliatoriaus bloko tvirtinimas / Akumulatora bloka nostiprināšana / Oprava batériového bloku / Pritrditev baterijskega sklopa / Batarya Paketinin Sabitlenmesi / Reparo do conjunto de baterias

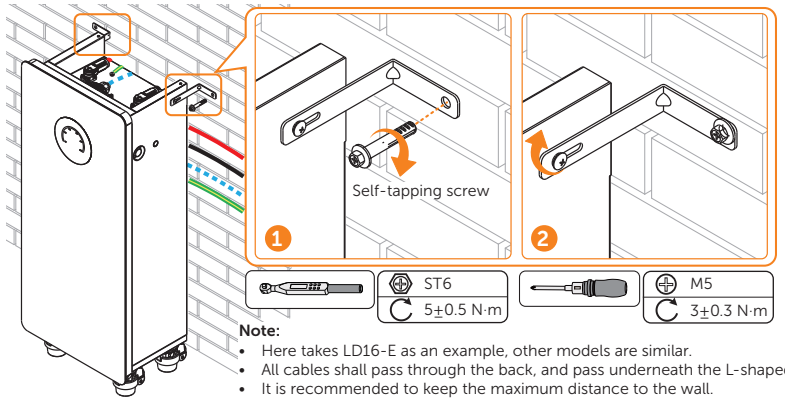

Note:
- Here takes LD16-E as an example, other models are similar.
- All cables shall pass through the back, and pass underneath the L-shaped bracket.
- It is recommended to keep the maximum distance to the wall.

Cover Installation / Abdeckung montieren / Installation du couvercle / Instalación de la cubierta / Instalação da tampa / Installatie van het deksel / Installazione del coperchio / Montaż pokrywy / Instalace krytu / Installation av höljet / Instalare capac / **Монтаж на капака** / Installation af dæksel / **Εγκατάσταση καλύμματος** / Katte paigaldamine / Suojuksen asennus / Ugradnja poklopca / Fedél felszerelése / Dangtelio montavimas / Pārsega uzstādīšana / Inštalácia krytu / Namestitev pokrova / Kapak Montajı / Instalação da tampa

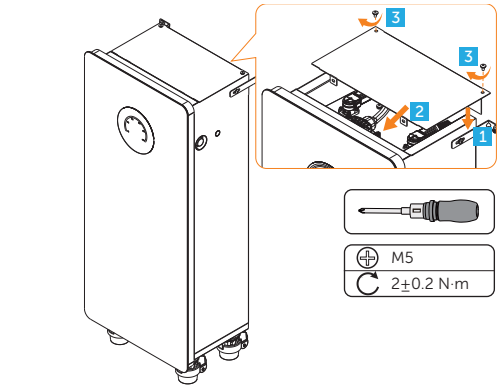

Note:
- Here takes LD16-E as an example, other models are similar.
- All cables shall pass through the back.

Locking Wheels / Arretierung der Räder / Verrouillage des roues / Ruedas con bloqueo / Roda de bloqueio / Wielen vergrendelen / Blocco delle ruote / Blokowanie kół / Zamykací kola / Låsbara hjul / Roți blocabile / **Заключване на колелата** / Hjul med lås / **Τροχοί με κλείδωμα** / Lukustuvad rattad / Pyörien lukitus / Blokiranje kotača / Rögzítő kerekek / Ratai su stabdžiais / Riteņu bloķēšana / Kolesá s aretáciou / Zaklepanje koles / Tekerleklerin Kilitlenmesi / Bloqueio de rodas

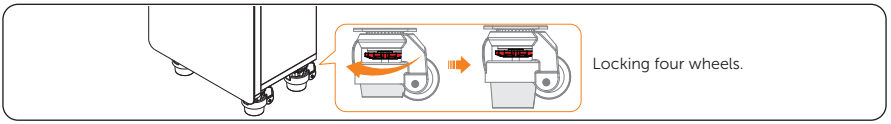

Power On/Off / Einschalten/Ausschalten / Marche/Arrêt / Encendido/apagado / Ligar/Desligar / In-/uitschakelen / Accensione/Spegnimento / Włączanie/wyłączanie zasilania / ZAP/VYP / Ström på/av / Pornire/Oprire / **Включване/изключване** / Strøm til/fra / **Ενεργοποίηση/Απενεργοποίηση** / Toide sisse/välja / Virta päälle/pois / Uključivanje/isključivanje napajanja / Be-/kikapcsolás / Maitinimo įjungimas / išjungimas / Barošanas ieslēgšana/izslēgšana / Napájanie zapnuté/vypnuté / Vklop/izklop / Güç Açık/Kapalı / Ligar/Desligar

WARNING!

- Shut down the inverter before powering off the battery.
- Wear personal protective equipment (PPE) and begin servicing the battery five minutes after power off.

Power on: 1 (1 2) > 2 (1 2) > 3 (1 2) > 4

Power off: 4 > 1 (1 2) > 2 (1 2) > 3 (1 2)

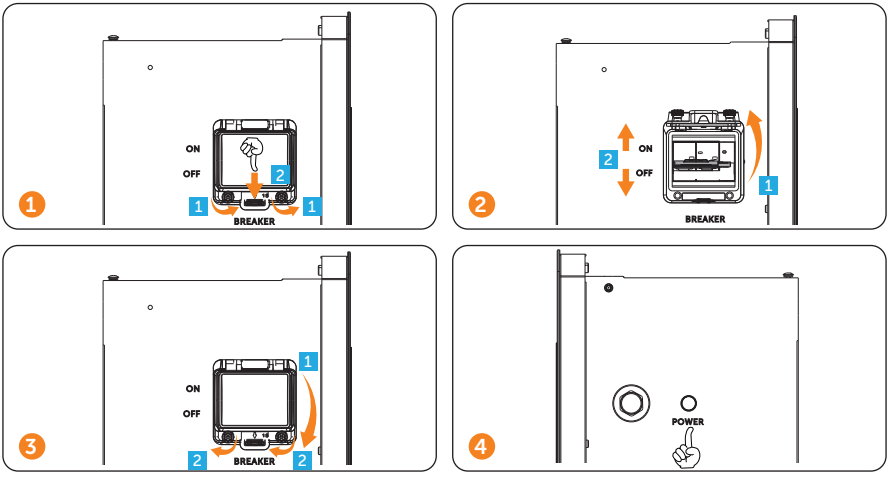

	Initial power on / black start	Subsequent power on	Power off
Press **POWER** button	5 s	1 s	3 s
LED indicator	From clockwise spinning to blue and green flashing.	Clockwise spinning.	Anticlockwise spinning.

LED Indicators / LED-Indikatoren / Indicateurs LED / Indicadores LED / Indicadores LED / LED-indicatoren / Indicatori LED / Wskaźniki LED / LED indikátory / LED-indikatorer / Indicatori LED / LED **индикатори** / LED-indikatorer / **Ενδεικτικές λυχνίες** LED / LED-indikaatorid / LED-merkkivalot / LED pokazatelji / LED kijelzők / LED indikatoriai /LED indikatori / LED indikátory / LED kazalniki / LED Göstergeleri / Indicadores LED

Here takes LD16-E as an example, other models are similar.

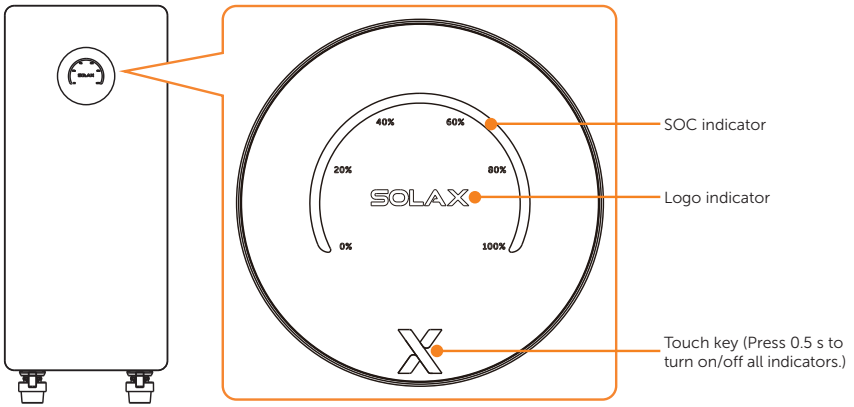

Status Description

Indication	SOC indicator	Logo indicator	Description
Start up			SOC indicator: a solid green semi-ring with a spinning orange and blue light strip clockwise over the top Logo indicator: flashing blue, green and orange light alternative
Shut down	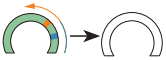	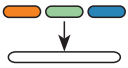	SOC indicator: a solid green semi-ring with a spinning orange and blue light strip anti-clockwise over the top to off Logo indicator: flashing orange, green and blue light alternative to off
Standby			SOC indicator: a solid green semi-ring with a solid blue battery capacity light over it Logo indicator: dark orange > baby orange > dark orange
Charging			SOC indicator: a solid green semi-ring with a solid blue battery capacity light over it and the orange light strip clockwise over the top Logo indicator: a solid orange light
Discharging			SOC indicator: a solid green semi-ring with a solid blue battery capacity light over it and the orange light strip anti-clockwise over the top Logo indicator: a solid orange light
Fault			SOC indicator: a solid green semi-ring with a solid blue battery capacity light over it Logo indicator: flashing red light

Note: Except for following indications (start-up, shut-down and fault), the SOC indicator in other states shows according to the actual battery capacity.

SOC Description

SOC state	Light state	SOC state	Light state	SOC state	Light state
SOC = 0%		41% < SOC ≤ 60%		SOC = 100%	
0% < SOC ≤ 20%		61% < SOC ≤ 80%			
21% < SOC ≤ 40%		81% < SOC < 100%			

SolaXCloud Download / SolaXCloud Download / Téléchargement SolaXCloud / Descarga de SolaXCloud / Descarga do SolaXCloud / SolaXCloud Downloaden / SolaXCloud Download / Pobieranie SolaXCloud / Stáhnout SolaXCloud / SolaXCloud-nedladdning / Descărcare SolaXCloud / **Изтегляне на SolaXCloud** / Hent SolaXCloud / **Λήψη SolaXCloud** / SolaXCloud'i allalaadimine / SolaXCloudin lataus / Preuzimanje SolaXCloud / SolaXCloud Letöltés / „SolaXCloud“ atsisiuntimas / SolaXCloud lejupielāde / Stiahnuť SolaXCloud / Prenesi SolaXCloud / SolaXCloud İndirmesi / Download do SolaXCloud



Scan the QR code to download SolaXCloud App. Follow the tutorial or online documents on the SolaXCloud App to complete the configuration.

Warranty Registration

Please visit the website: https://www.solaxcloud.com/user-center/ to complete the warranty registration. For more detailed warranty terms, please visit SolaX official website: www.solaxpower.com.

SolaX Power Network Technology (Zhejiang) Co., Ltd.

Add.: No. 278, Shizhu Road, Chengnan Sub-district, Tonglu County,
Hangzhou, Zhejiang, China
E-mail: info@solaxpower.com

Copyright © SolaX Power Network Technology (Zhejiang) Co., Ltd. All rights reserved.

320102174703